KUJU
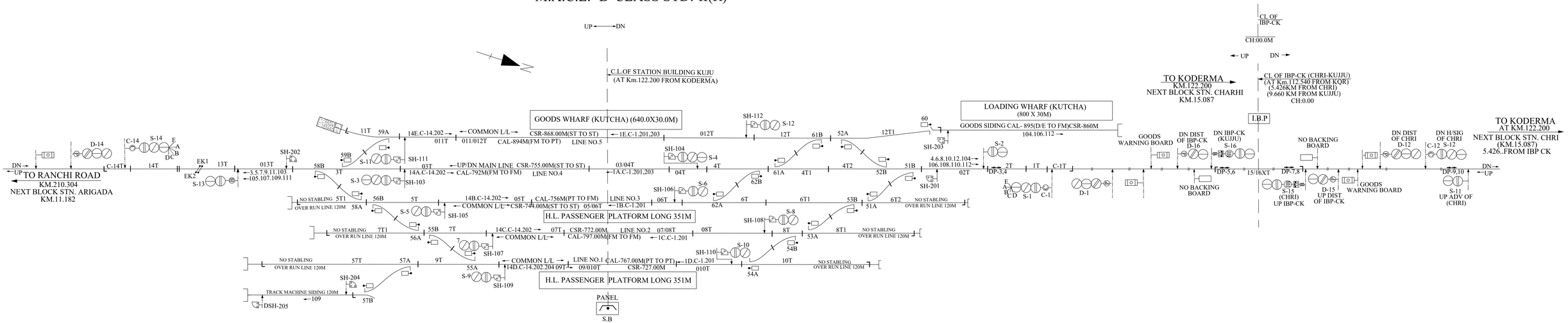
M.A.C.L. `B' CLASS STD.-II(R)