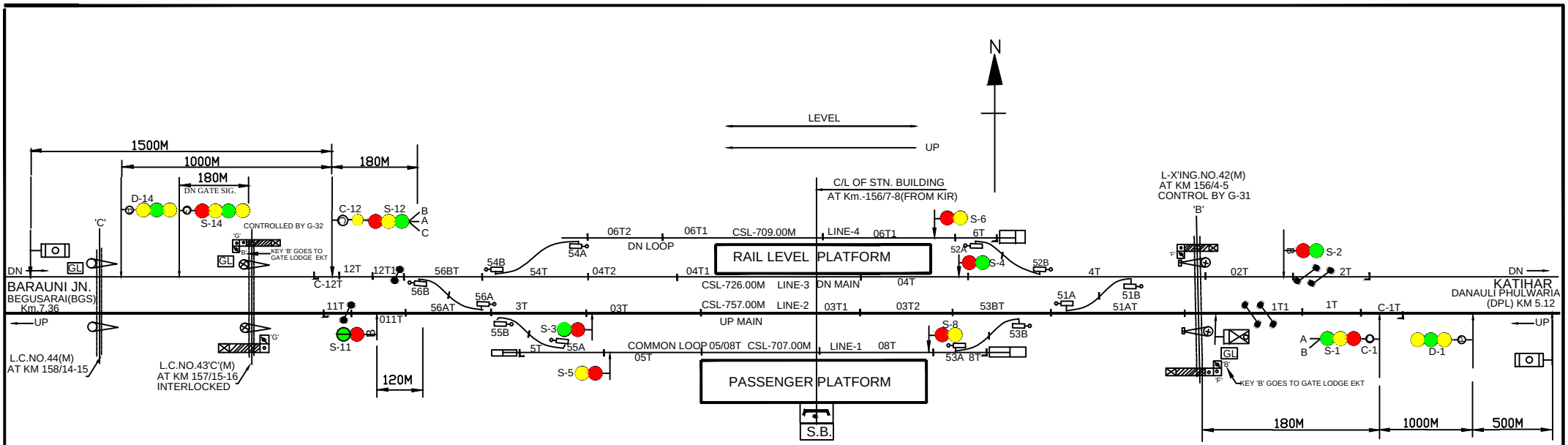

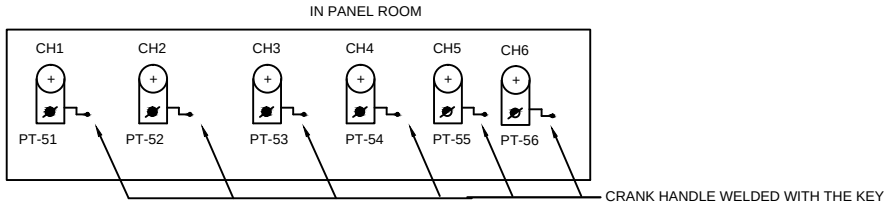

PANEL DETAILS:

MAIN SIGNAL BUTTONS:	1.2.3.4.5.6.8.11.12.14.
CALLING 'ON' SIG. BUTTONS:	C-1,C-12
POINT CONTROL BUTTONS:	51.52.53.54.55.56.
GATE CONTROL BUTTONS:	G-31,G-32.
CRANK HANDLE CONTROL BUTTONS:	CH1.CH2.CH3.CH4.CH5.CH6.

NOTE:-

1. ABSOLUTE BLOCK SYSTEM OF WORKING WITH BGS & DPL
2. DL UFSBI WORKING WITH DPL & DL BI WORKING WITH BGS.
3. MAGNETO TELEPHONE PROVIDED BETWEEN PANEL ROOM & GATE No. 41'C',42'B', 43'C',& 44'C'.
4. CONTROL TELEPHONE PROVIDED IN PANEL ROOM
5. AXLE COUNTER PROVIDED FOR LAST VEHICLE VERIFICATION & INTERLOCKED WITH BLOCK INSTT.
6. PROVISION OF SLIDING BOOM IN ADDITION TO LC NO. 42'B' & 43'C'.
6. PROVISION OF EOLB AT LC NO. 42'B'.

EAST CENTRAL RAILWAY				STATION WORKING RULE DIAGRAM	***LAKHO***
SON\PUR DIVISION				MACL STD-II(R) CLASS-'B'	
	DSTE/ECR/SEE	SSE/DRG/SEE	SE/DRG/SEE	TO SUIT SIP NO. ECR/SIP/SEE/156/2006	