BHAGWANPUR DESUA STATION
भगवानपुर देसुआ स्टेशन

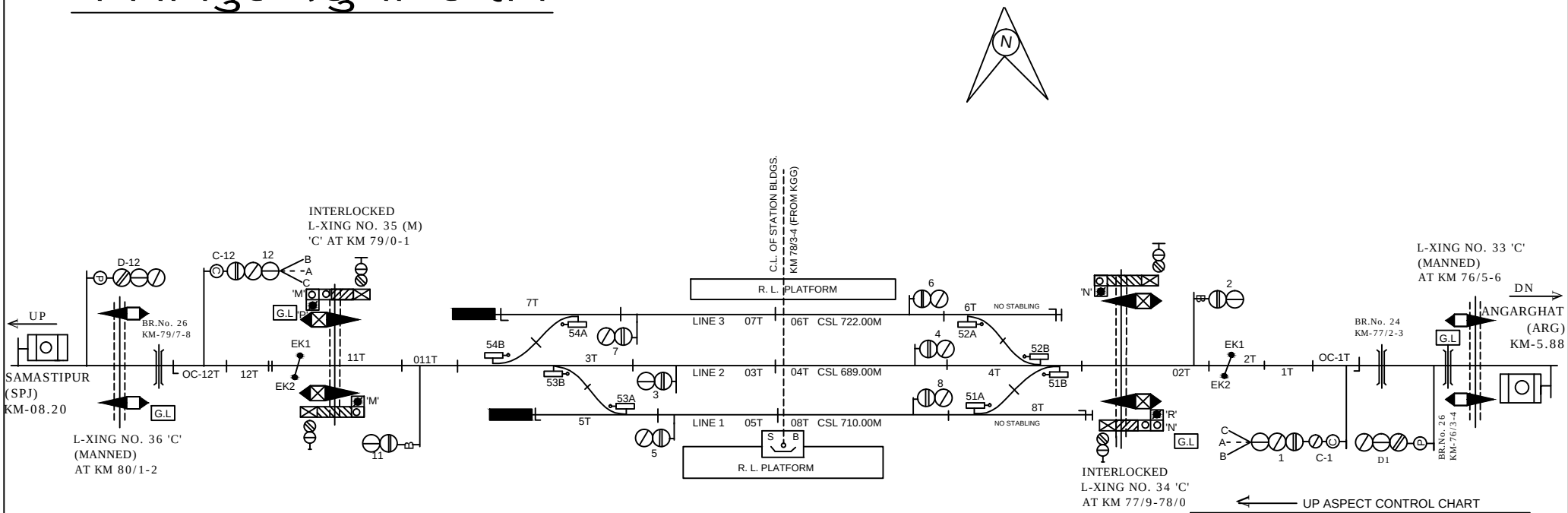

DAIDO TYPE BLOCK INSTRUMENT

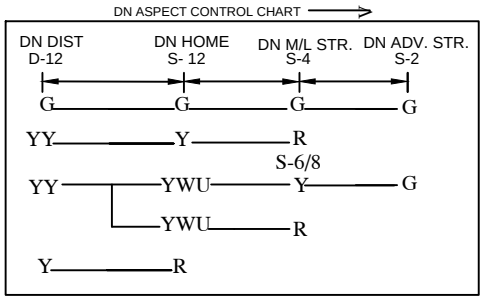

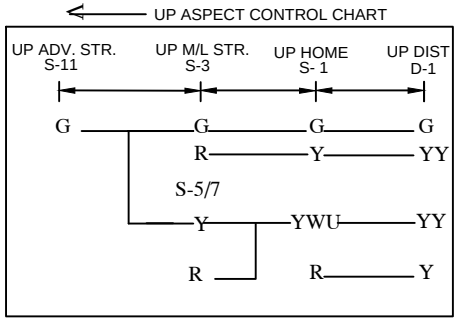

NOTE:-

MAGNETO TELEPHONE PROVIDED BETWEEN S.M's OFFICE & GATE NO. 32 'C', 33'C' 34 'C', 35 'C', 36'C' & 37'C'.

CLASS OF STATION : B
STD OF SIG & INTERLOCKING: STD-II ®

EAST CENTRAL RAILWAY SAMASTIPUR DIVISION				STATION WORKING RULE DIAGRAM MACL, STD-II ®, CLASS 'B'	BHAGWANPUR DESUA	SWRD NO.- SR.DSTE/SPJ 2018/RD/08
	SR.DSTE/SPJ	DSTE/SPJ	JE/DRG	TO SUIT SIP NO. ECR/SIP/SPJ/392/2006 ALT-IX		