SIKTA STATION

सिकटा स्टेशन

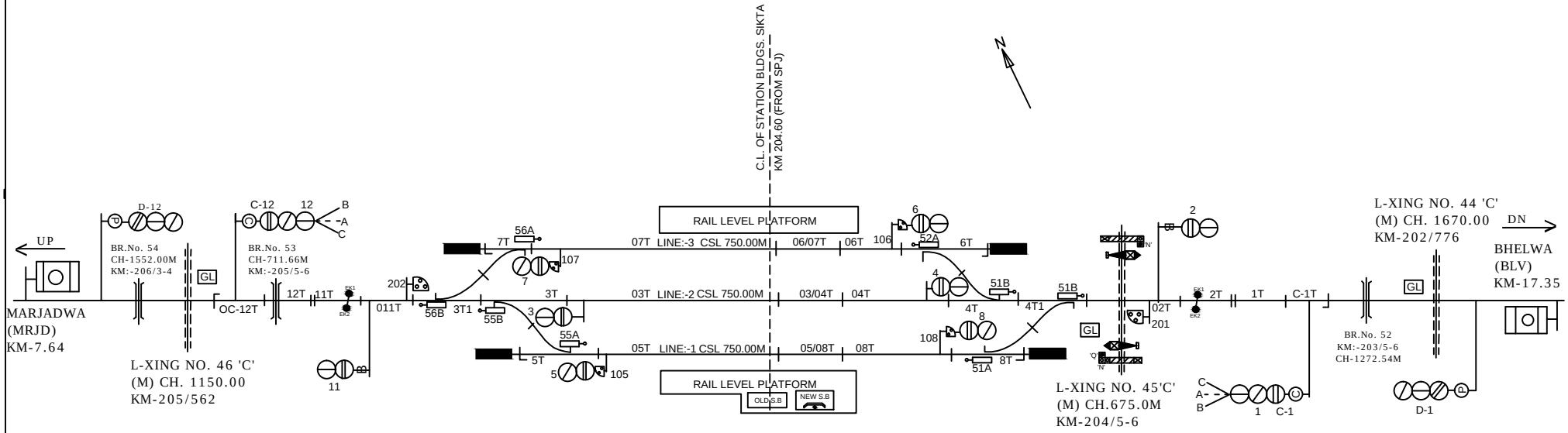

TOKENLESS BLOCK INSTRUMENT

NOTE:-
MAGNETO TELEPHONE PROVIDED BETWEEN PANEL ROOM AND GATE NO.43, 44, 45, 46, 47 & 48.

CLASS OF STATION : B
STD OF SIG & INTERLOCKING: STD-II ®

EAST CENTRAL RAILWAY SAMASTIPUR DIVISION				STATION WORKING RULE DIAGRAM CENTRAL PANEL (EI) MACL, STD-II R , CLASS 'B'	SIKTA	SWRD NO.- DY.CSTE/C-I/SPJ 2010/RD/06
	SR.DSTE/SPJ	DSTE/SPJ	SSE/SIG	TO SUIT SIP NO. ECR/SIP/SPJ/354/2015 ALT-II		