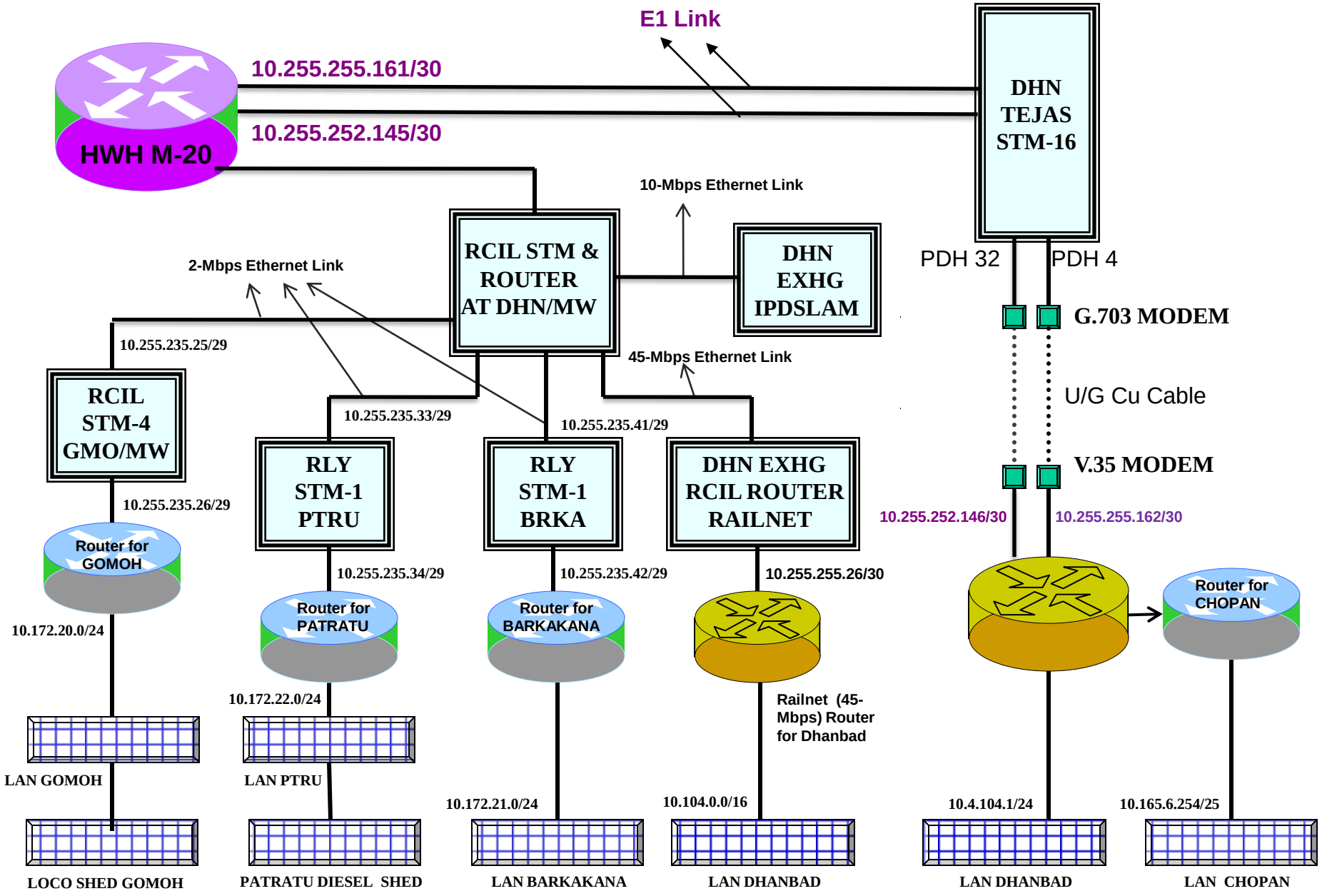Railnet Connectivity, East Central Railway, Dhanbad