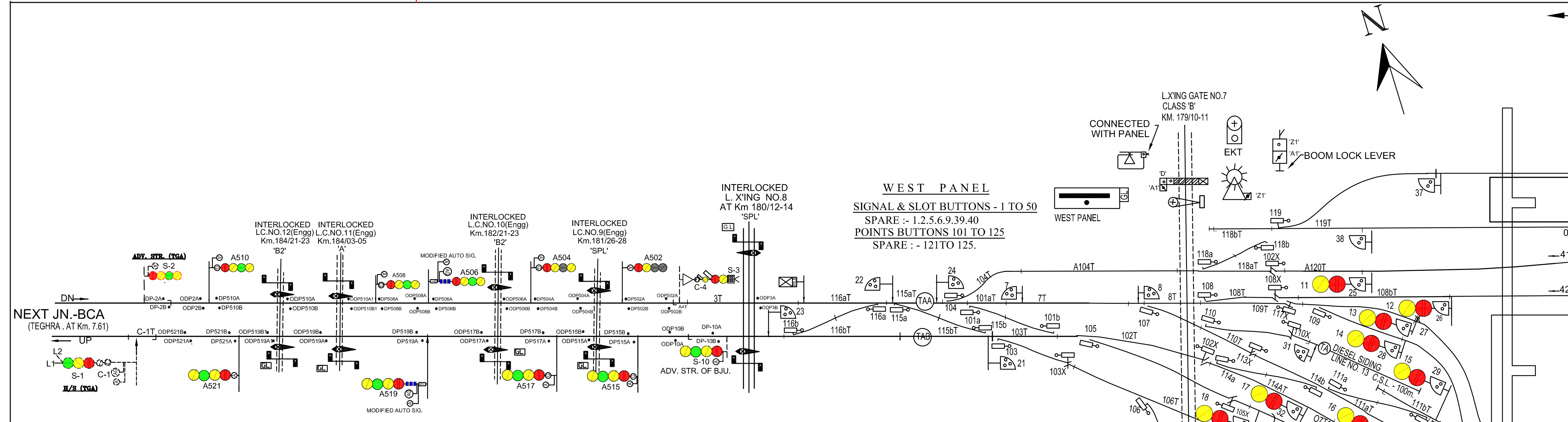

NOTES :-

1. BJU - TIL AND BJU-GHZ SECTION HAS BEEN PROVIDED WITH AUTOMATIC BLOCK SECTIONS.
2. TWO CPU VDU(ONE SET STAND BY)PROVIDED FOR VDU OPERATION IN SM ROOM (EAST PANEL) AND ONE COLOUR MONITOR PROVIDED IN MAINTENANCE ROOM(EAST PANEL).
3. PROVISION OF EOLB AT LC NO.- 6,7,8,9,58,59,60 & 61.
4. TELEPHONE PROVIDED BETWEEN WEST PANEL ROOM, SM ROOM, EAST PANEL ROOM & LC NO.- 6,7,8,9,10,59,60 & 61.
5. ROAD SIGNAL SHALL BE RAISED BACK TO DANGER BEFORE MOVING OF SLIDING BOOM BARRIER TO CLOSED THE LC GATE.
6. PROVISION OF 5 SEC. TIME DELAY IN CONCERNED HR CIRCUIT OF STARTER SIGNAL NO. 4,6,168,169,170,171,172,173,174, 175,176,177,217,218,246 & 251.
7. EUUYN EAST PANEL & EUUYN WEST PANEL WILL BE PROVIDED WITH SEALING ARRANGEMENTS.
8. 'Y' ASPECT OF SIGNAL NO. 173.174.175.176.&177. CONTROLLED BY 'Y' ASPECT OF SIG.NO.178.
9. 'Y' ASPECT OF SIGNAL NO. 172. CONTROLLED BY 'Y' ASPECT OF SIG. NO.-178. OR 'Y' OR 'G' ASPECT OF SIG. NO. 179.
10. 'Y' ASPECT OF SIG. NO. 170&171. CONTROLLED BY 'Y' OR 'G' ASPECT OF SIG.NO.179.
11. 'Y' ASPECT OF SIG. NO. 168&169. CONTROLLED BY 'Y' OR 'G' ASPECT OF SIG.NO.179. OR 167.
12. 'Y' ASPECT OF SIG. NO. 11.12.13.14.15.16.17.18.19.& 20. CONTROLLED BY 'Y' OR 'G' ASPECT OF SIG.NO.10.
13. 60 SEC. TIME DELAY PROVIDED FOR CALLING-ON SIGNAL NO.- C-1, C-162,C-164, C-212.
14. DEAD APPROACH LOCKING PROVIDED FOR INTERLOCKED GATES OF BLOCK SECTION WITH 60 SEC. TIME DELAY.
15. ALL SIGNALLING GEARS CONTROLLED BY EXISTING EAST OUTER PANEL WILL BE CONTROLLED BY EAST PANEL AFTER DISTRIBUTED E.I. WORK AT EAST PANEL.

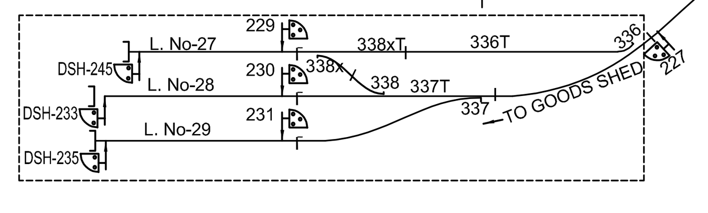

CRANK HANDLE AT PANEL ROOM

CH-1	-	301,304,305,315,316,317,318
CH-2	-	302
CH-3	-	303
CH-4	-	306,307,311
CH-5	-	309,310
CH-6	-	308,312,313,314
CH-7	-	322,324,325,326,335
CH-8	-	319,327
CH-9	-	320,321
CH-10	-	328
CH-11	-	329
CH-12	-	323,330,331
CH-13	-	SPARE
CH-14	-	340
CH-15	-	350
CH-16	-	336,337,338
CH-17	-	355
CH-18	-	356
CH-19	-	357
CH-20	-	358

EAST PANEL

SIGNAL & SLOT BUTTONS: 1 TO 252

SPARES :- 3.5.7.9.12,13,14,15 -103,105,107-150,161,163,211, 219.228,232,234,236,247,248,249,250,252

POINTS BUTTONS :- 301 TO 360

SPARES:- 332.333.334.339.341-349.351-354.359.360

1. (i) DLBI BLOCK INSTRUMENT WORKING BETWEEN EAST BJU PANEL AND TILRATH STN.
   (ii)TLBI BLOCK INSTRUMENT FOR NORTH LINE AND SOUTH LINE WORKING BETWEEN EAST CABIN AND DKGS
2. PROVISION OF 5 SEC. TIME DELAY PROVIDED IN CONCERNED HR OF STR. NO.-4,6,168,169,170,171,172,173,174,175,176,177,217,218,246 & 251.

DETAILS OF OVERLAP CONTROL AT BJU STN.

SIGNAL NO.	LEADING TO	DETAILS OF OVERLAP
S-3 (SLOT-213)	BJU L-1	OV SET UP TO 330XT KEEPING D/S PT. 330 N
S-3 (SLOT-214)	BJU L-2	OV SET UP TO SAND HUMP KEEPING PT. 331 N
S-3 (SLOT-151)	BJU L-3	OV SET UP TO 323XT KEEPING PT. 323 N
		OV SET UP TO 330T & 242T KEEPING PT. 323R & 330N
S-3 (SLOT-152)	BJU L-4	OV SET UP TO 335T,322T KEEPING PT. 301N,305N,322N,335N
		OV SET UP TO 317bT KEEPING PT. 305R, 318R, 317N
S-3 (SLOT-153)	BJU L-5	OV SET UP TO D/E KEEPING PT. 303 N & 304 N
S-3 (SLOT-154)	BJU L-6	OV SET UP TO D/E KEEPING PT. 303 R & 304 N
S-3 (SLOT-155)	BJU L-7	OV SET UP TO 315T KEEPING PT. 312N,315N,316N,317N,318N
		OV SET UP TO 312aT KEEPING PT. 312R, 313N, 314N
S-3 (SLOT-156)	BJU L-8	OV SET UP TO 312aT(S178) KEEPING PT. 312N, 313N, 314N
S-3 (SLOT-157)	BJU L-9	OV SET UP TO D/E KEEPING PT. 309 N & 310 N ~~(313W 308N)~~
S-3 (SLOT-158)	BJU L-10	OV SET UP TO D/E KEEPING PT. 309 R & 310 N ~~(313W 308N)~~
S-3 (SLOT-159)	BJU L-11	OV SET UP TO D/S 311N KEEPING PT. 307N, 308 N, 311xN
S-3 (SLOT-160)	BJU L-12	OV SET UP TO D/S 311N KEEPING PT. 306N,307R,308 N,311xN
S-212,162,245 (SLOT-41)	BJU L-3	OV SET UP TO A120T KEEPING D/S PT. 120N
S-212,162,245 (SLOT-42)	BJU L-4	OV SET UP TO 108bT KEEPING D/S PT. 108N
S-212,162,245 (SLOT-43)	BJU L-5	OV SET UP TO 109T KEEPING PT. 109N & D/S PT. 117N
S-212,162,245 (SLOT-44)	BJU L-6	OV SET UP TO 109T KEEPING PT. 109R & D/S PT. 117N
S-212,162,245 (SLOT-45)	BJU L-7	OV SET UP TO D/E KEEPING PT. 111N
S-212,162,245 (SLOT-46)	BJU L-8	OV SET UP TO 111aT KEEPING PT. 111N, 113N & 114N
S-212,162,245 (SLOT-47)	BJU L-9	OV SET UP TO 114aT KEEPING D/S PT. 102N & 114N
S-212,162,245 (SLOT-48)	BJU L-10	OV SET UP TO 102T KEEPING PT. 101N, 115N & 105R
S-212,162,245 (SLOT-49)	BJU L-11	OV SET UP TO 106T KEEPING D/S PT. 103N, 106N & 112N
S-212,162,245 (SLOT-50)	BJU L-12	OV SET UP TO 106T KEEPING D/S PT. 103N, 106R & 112N

DN
ASPECT CONTROL DN DIRECTION

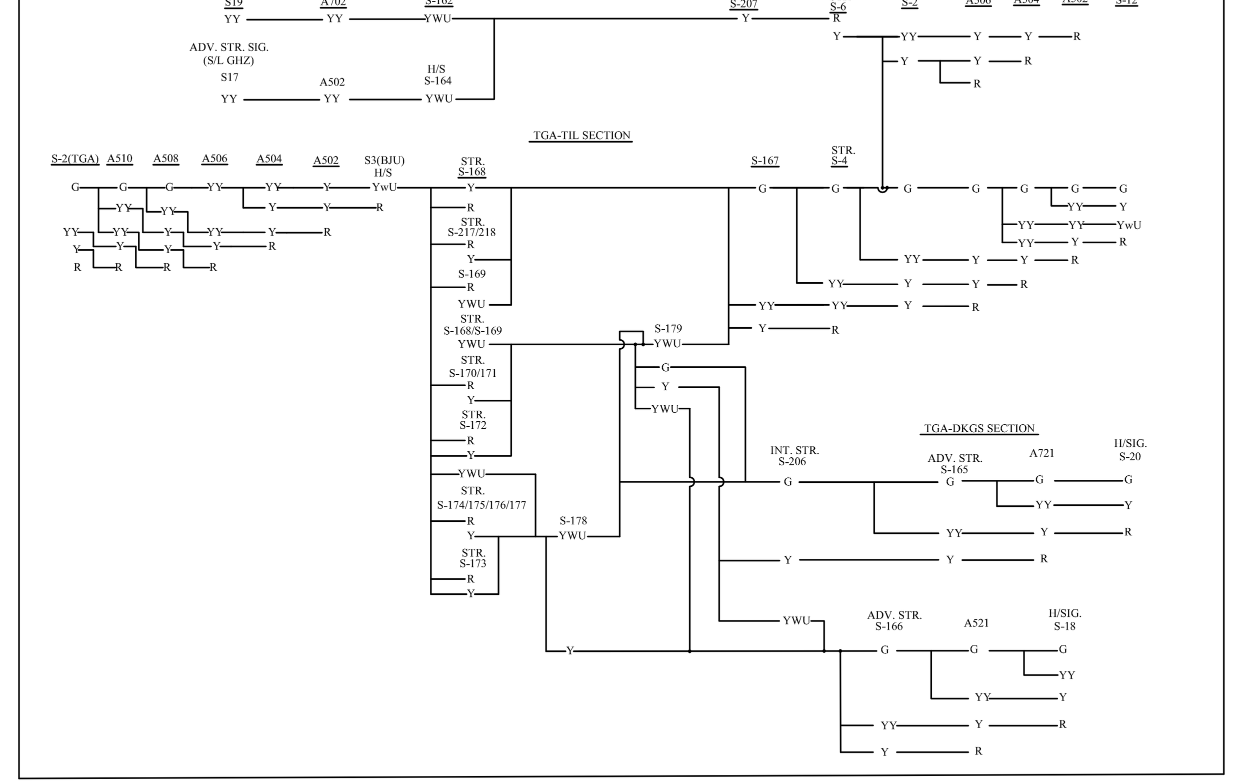

TGA-BJU-GHZ SECTION
DKGS-TIL BYPASS SECTION

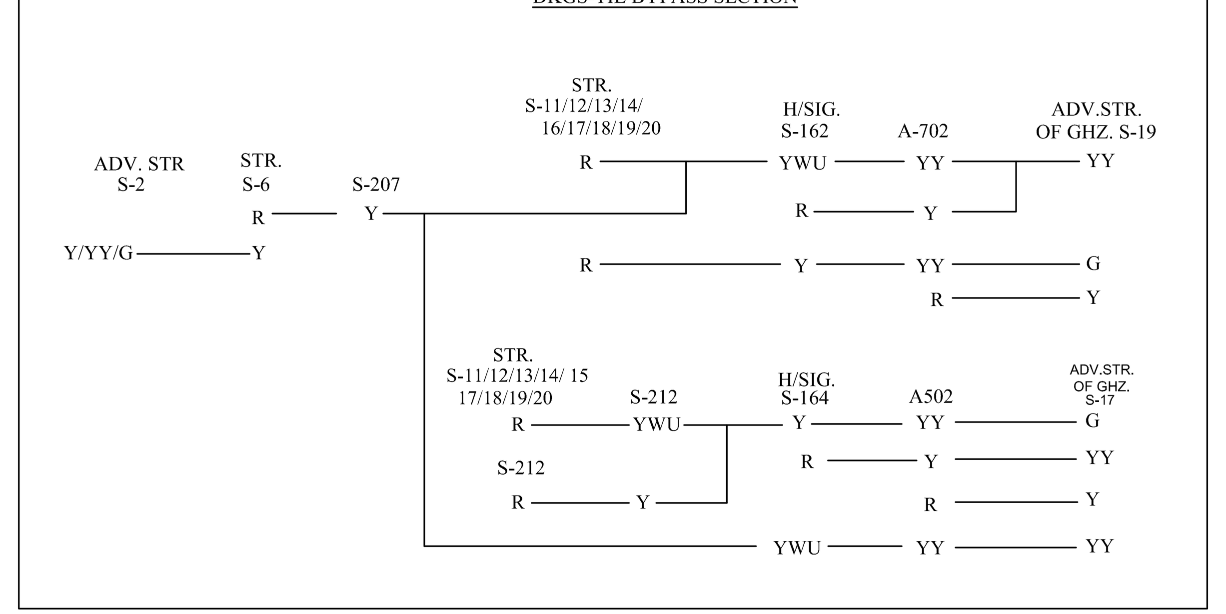

ASPECT CONTROL UP DIRECTION

TGA-BJU-TIL SECTION

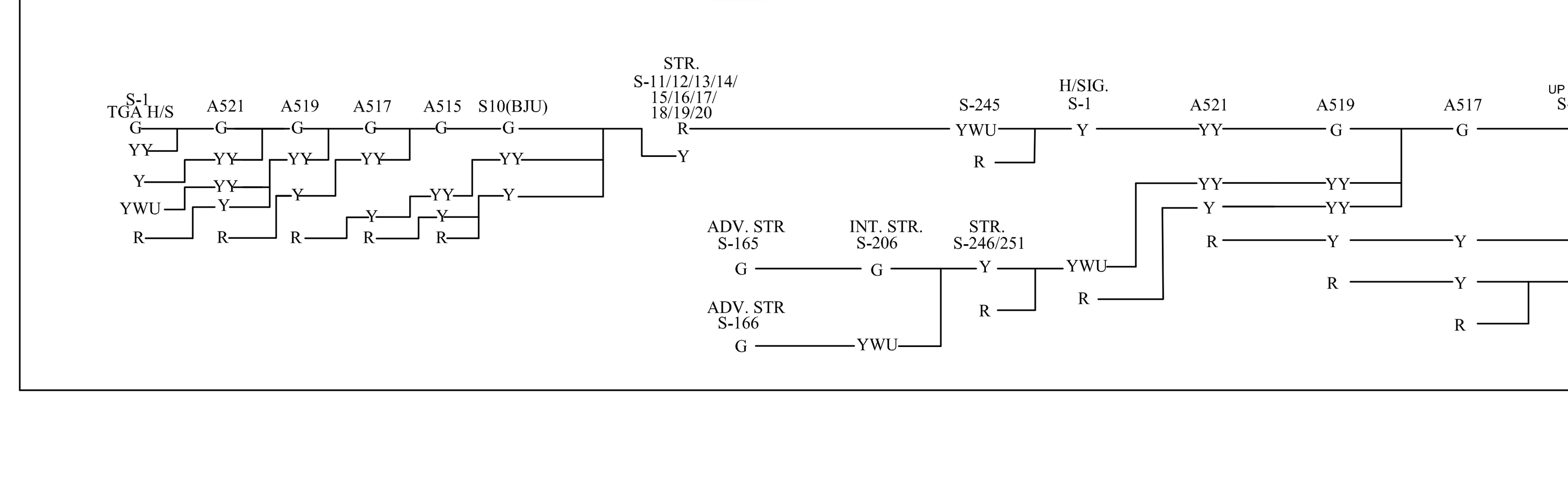

EAST CENTRAL RAILWAY SONPUR DIVISION	DSTE/SEE	SSE/DRG	SE/DRG	STATION WORKING RULE DIAGRAM MACL STD-I CLASS-'SPL' TO SUIT SIP NO. ECR/SIP/SEE-BJU/153/2025	BARAUNI JN.	SWRD NO. Sr.DSTE/SEE/BJU(RD)

EAST CENTRAL RAILWAY SONPUR DIVISION	DSTE/SEE	SSE/DRG	SE/DRG	STATION WORKING RULE DIAGRAM MACL STD-I CLASS-'SPL' TO SUIT SIP NO. ECR/SIP/SEE-BJU/153/2025	BARAUNI JN.	SWRD NO. Sr.DSTE/SEE/BJU(RD)