SIMRI BAKHATIARPUR STATION

सिमरी बक्तीयारपुर स्टेशन

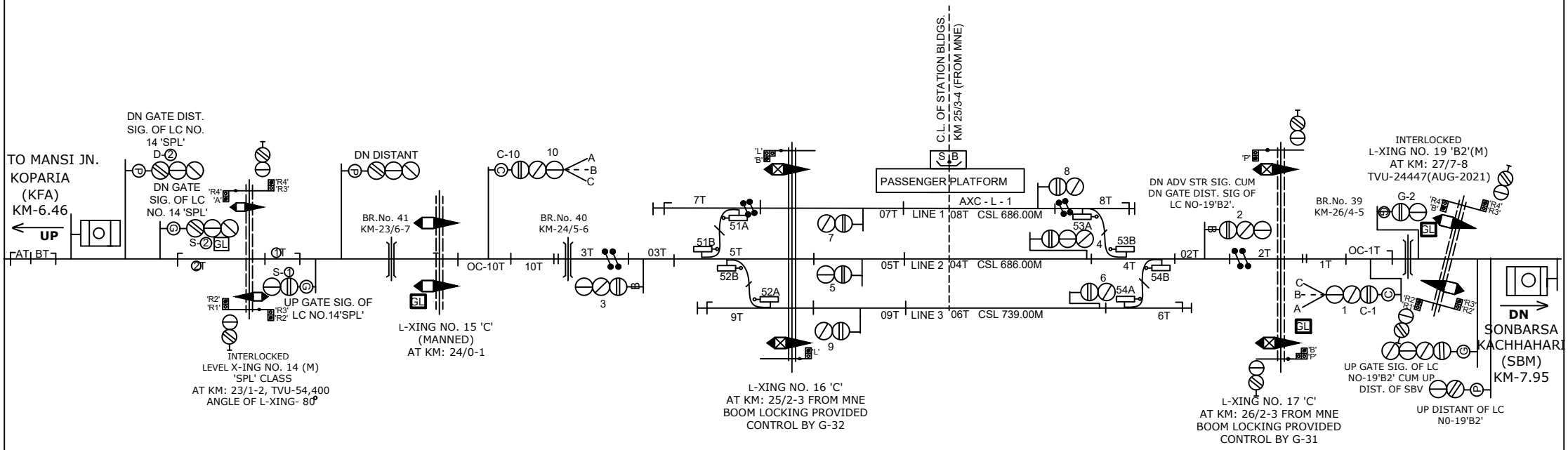

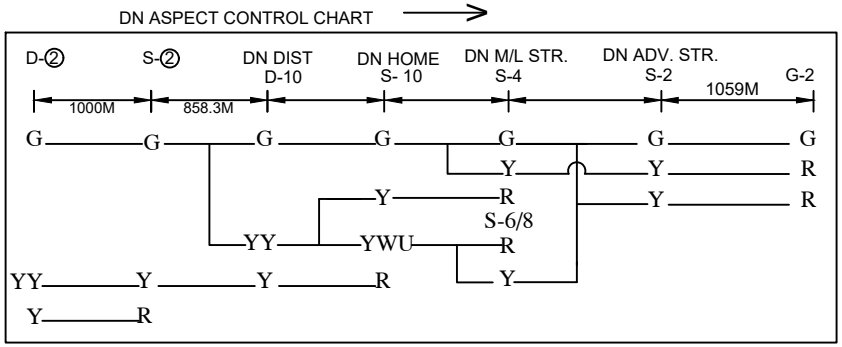

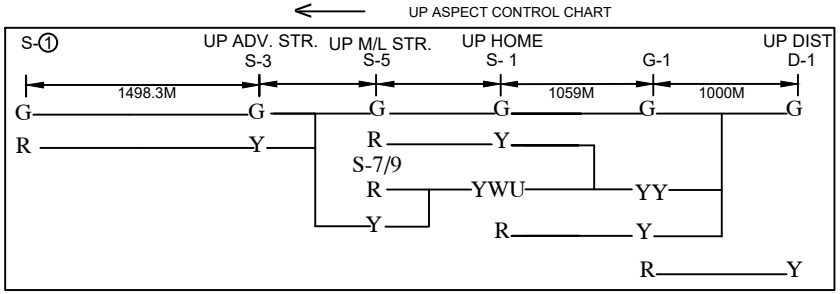

NOTE:
MAGNETO TELEPHONE PROVIDED BETWEEN PANEL CABIN & L.C. GATE NO.:- 14'C', 15'C' & 16'C' BETWEEN KFA-SBV AND LC GATE NO.17'C', 19'C' BETWEEN SBV-SBM.

CLASS OF STATION : B
STD OF SIG & INTERLOCKING: STD-II(R)

EAST CENTRAL RAILWAY SAMASTIPUR DIVISION				STATION WORKING RULE DIAGRAM MACL, STD-II(R), CLASS 'B'	SIMRI BAKHTIARPUR	SWRD NO.- SR.DSTE/SPJ RD/2021/01
	SR.DSTE/SPJ	DSTE/SPJ	JE/DRG	TO SUIT SIP NO. ECR/SIP/SPJ-SBV/405/2021, ALT-II		